3.3V, Wide Bandwidth, 8-Channel, 2:1 Mux/DeMux USB 2.0 Switch with Single Enable

Features

- R_{ON} is 4Ω typical
- Low bit-to-bit skew: 200ps
- Low crosstalk: –27dB @ 250MHz
- Low Current Consumption; 20µA
- Near-Zero propagation delay: 250ps
- Switching speed: 3ns
- Channel On-Capacitance: 6pF (typical)
- V_{CC} Operating Range: +3.0V to +3.6V
- ESD >2000V . . . Human Body Model
- >500MHz bandwidth (or data frequency)
- Packaging (Pb-free & Green available):
  -48-pin 240 mil wide plastic TSSOP (A)

Applications

- Routes physical layer signals for high-speed, high bandwidth differential protocols

Description

The PI3USB40 is a 16- to 8-channel multiplexer/demultiplexer Switch with Hi-Z outputs. Industry leading advantages include a propagation delay of less than 250ps, resulting from its low channel resistance and I/O capacitance. The device multiplexes differential outputs from a USB transceiver device to one of two corresponding outputs.

The switch is bidirectional and offers little or no attenuation of the high-speed signals at the outputs. It is designed for low bit-to-bit skew, high channel-to-channel noise isolation and is compatible with various standards, such as High Speed USB 2.0 (480 Mb/s).

Block Diagram

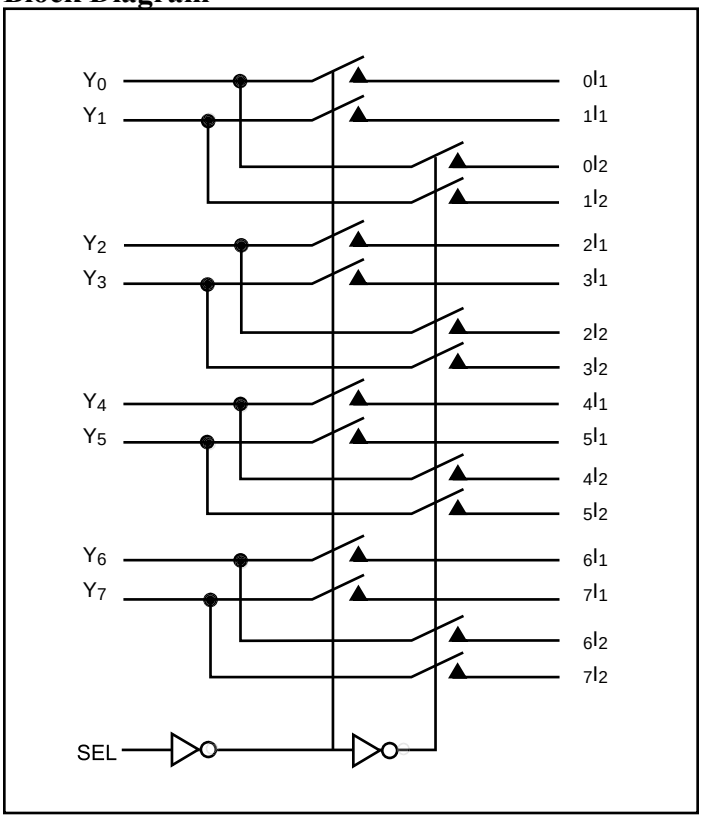

Pin Description

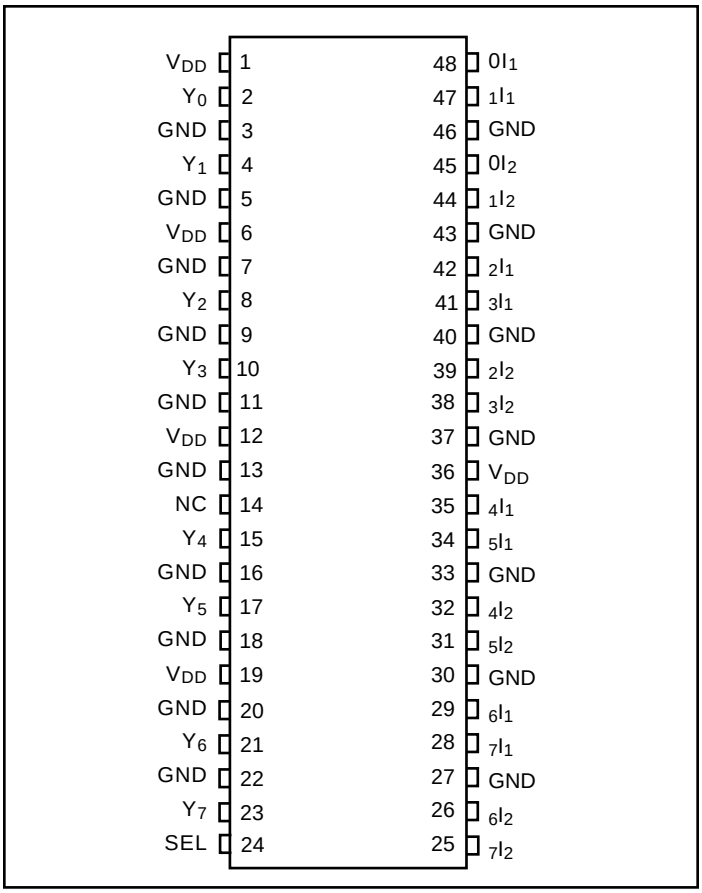

Maximum Ratings

(Above which useful life may be impaired. For user guidelines, not tested.)

Storage Temperature.....–65°C to +150°C
Supply Voltage to Ground Potential.....–0.5V to +4.0V
DC Input Voltage.....–0.5V to +5.5V
DC Output Current.....120mA
Power Dissipation.....0.5W

Note:
Stresses greater than those listed under MAXIMUM RATINGS may cause permanent damage to the device. This is a stress rating only and functional operation of the device at these or any other conditions above those indicated in the operational sections of this specification is not implied. Exposure to absolute maximum rating conditions for extended periods may affect reliability.

Truth Table

Function	SEL
Y_N to $_NI_1$	L
Y_N to $_NI_2$	H

DC Electrical Characteristics for USB 2.0 Switching over Operating Range

(T_A = –40°C to +85°C, V_{CC} = 3.3V ±10%)

Paramenter	Description	Test Conditions	Min.	Typ.(2)	Max.	Units
V_{IH}	Input HIGH Voltage	Guaranteed HIGH level	2			V
V_{IL}	Input LOW Voltage	Guaranteed LOW level			0.8	
V_{IK}	Clamp Diode Voltage	V_{CC} = Max., I_{IN} = –18mA		–0.7	–1.2	
I_{IH}	Input HIGH Current	V_{CC} = Max., V_{IN} = V_{CC}			±5	µA
I_{IL}	Input LOW Current	V_{CC} = Max., V_{IN} = GND			±5	
I_{OFF}	Power Down Leakage Current	V_{CC} = 0V, V_A = 0V, $V_B \leq 3.6$				
R_{ON}	Switch On-Resistance(3)	V_{CC} = Min., 1.5V ≤ V_{IN} ≤ V_{CC}, I_{IN} = –40mA		4	8	Ω
$R_{FLAT(ON)}$	On-Resistance Flatness(4)	V_{CC} = Min., V_{IN} @ 1.5V and V_{CC}, I_{IN} = –40mA		1		
ΔR_{ON}	On-Resistance match from center ports to any other port(4)	V_{CC} = Min., 1.5V ≤ V_{IN} ≤ V_{CC}, I_{IN} = –40mA		0.9	2	

Capacitance (T_A = 25°C, f = 1MHz)

Parameters[5]	Description	Test Conditions	Typ.	Max.	Units
C_{IN}	Input Capacitance	V_{IN} = 0V	2.0	3.0	pF
C_{OFF}	Port I Capacitance, Switch OFF		4.0	6.0	
C_{ON}	Switch Capacitance, Switch ON		6.0	10.0	

Notes:
1. For max. or min. conditions, use appropriate value specified under Electrical Characteristics for the applicable device type.
2. Typical values are at V_{CC} = 3.3V, T_A = 25°C ambient and maximum loading.
3. Measured by the voltage drop between A and B pins at indicated current through the switch. On-Resistance is determined by the lower of the voltages on the two (A & B) pins.
4. This parameter is determined by device characterization but is not production tested.

Power Supply Characteristics

Parameters	Description	Test Conditions[1]	Min.	Typ.[2]	Max.	Units
I_{CC}	Quiescent Power Supply Current	V_{CC} = Max., V_{IN} = GND or V_{CC}			800	µA

Notes:
1. For max. or min. conditions, use appropriate value specified under Electrical Characteristics for the applicable device type.
2. Typical values are at V_{CC} = 3.3V, T_A = 25°C ambient and maximum loading.
3. Per TTL driven input (control inputs only); A and B pins do not contribute to I_{CC}.

Dynamic Electrical Characteristics Over the Operating Range (T_A=-40º to +85ºC, V_{CC}=3.3V±10%, GND=0V)

Parameter	Description	Test Conditions	Min.	Typ.[2]	Max.	Units
X_{TALK}	Crosstalk	R_L = 100Ω, f = 250MHz		-27		dB
O_{IRR}	OFF Isolation			-32		
BW	Bandwidth –3dB	R_L = 100Ω		500		MHz

Switching Characteristics

Paramenter	Description	Test Conditions	Min.	Typ.[2]	Max.	Units
t_{PD}	Propagation Delay[2,3]			0.25		ns
t_{PZH}, t_{PZL}	Line Enable Time - SEL to Y_N, I_N		0.5		15	
t_{PHZ}, t_{PLZ}	Line Disable Time - SEL to Y_N, I_N		0.5		9	
$t_{SK(o)}$	Output Skew between center port (Y4 to Y5) to any other port[2]			0.1	0.2	
$t_{SK(p)}$	Skew between opposite transitions of the same output (tPHL - tPLH) [2]			0.1	0.2	

Notes:
1. For Max. or Min. conditions, use appropriate value specified under Electrical Characteristics for the applicable device type.
2. Guaranteed by design.
3. The bus switch contributes no propagational delay other than the RC delay of the On-Resistance of the switch and the load capacitance. The time constant for the switch alone is of the order of 0.25ns for 10pF load. Since this time constant is much smaller than the rise/fall times of typical driving signals, it adds very little propagational delay to the system. Propagational delay of the bus switch when used in a system is determined by the driving circuit on the driving side of the switch and its interactions with the load on the driven side.

Test Circuit for Electrical Characteristics(1)

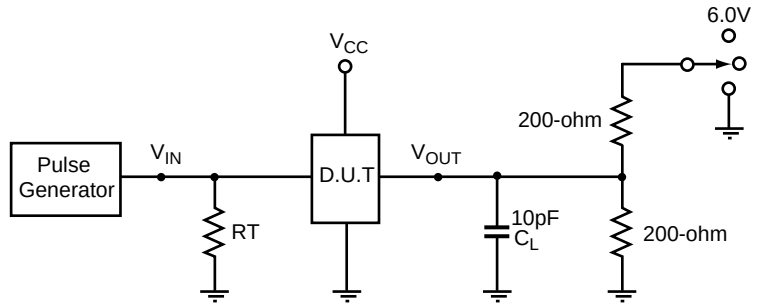

Notes:

1. C_L = Load capacitance: includes jig and probe capacitance.
2. R_T = Termination resistance: should be equal to Z_{OUT} of the Pulse Generator
3. Waveform 1 is for an output with internal conditions such that the output is low except when disabled by the output control.
   Waveform 2 is for an output with internal conditions such that the output is high except when disabled by the output control.
4. All input impulses are supplied by generators having the following characteristics: PRR ≤ MHz, Z_O = 50Ω, t_R ≤ 2.5ns, t_F ≤ 2.5ns.
5. The outputs are measured one at a time with one transition per measurement.

Switch Positions

Test	Switch
t_{PLZ}, t_{PZL} (output on B-side)	6.0V
t_{PHZ}, t_{PZH} (output on B-side)	GND
Prop Delay	Open

Test Circuit for Dynamic Electrical Characteristics

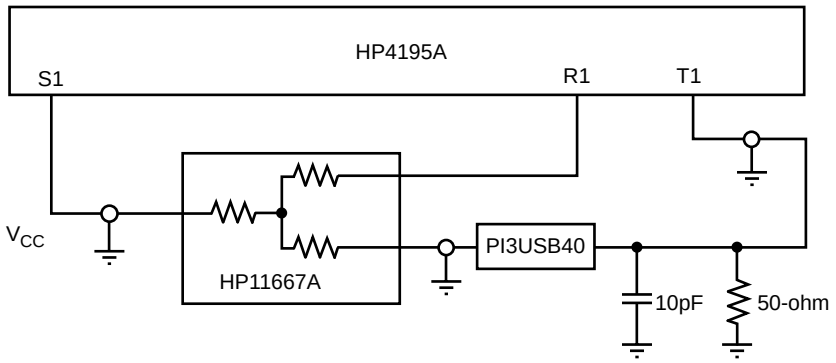

Switching Waveforms

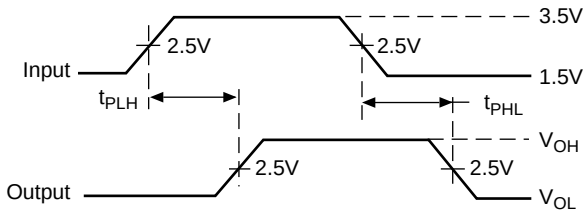

Voltage Waveforms Propagation Delay Times

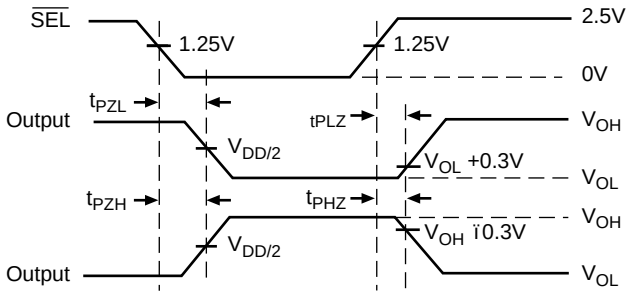

Voltage Waveforms Enable and Disable Times

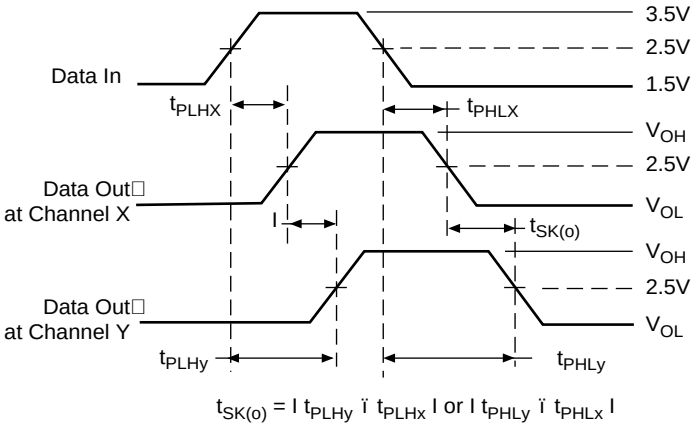

$t_{SK(o)}$ = I t_{PLHy} ï t_{PLHx} I or I t_{PHLy} ï t_{PHLx} I

Output Skew - $t_{SK(o)}$

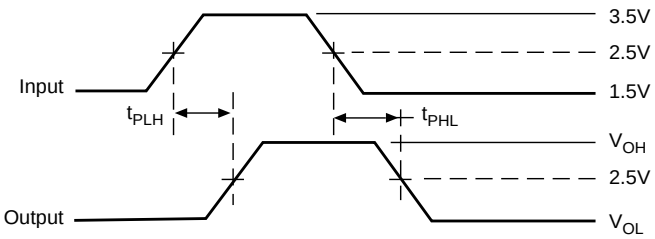

$t_{SK(p)}$ = I t_{PHL} ï t_{PLH} I

Pulse Skew - $t_{SK(p)}$

Applications Information

Logic Inputs

The logic control inputs can be driven up to +3.6V regardless of the supply voltage. For example, given a +3.3V supply, the output enables or select pins may be driven low to 0V and high to 3.6V. Driving IN Rail-to-Rail® minimizes power consumption.

Power-Supply Sequencing

Proper power-supply sequencing is advised for all CMOS devices. It is recommended to always apply V_{CC} before applying signals to the input/output or control pins.

Rail-to-Rail is a registered trademark of Nippon Motorola, Ltd

Packaging Mechanical: 48-Pin TSSOP (A)

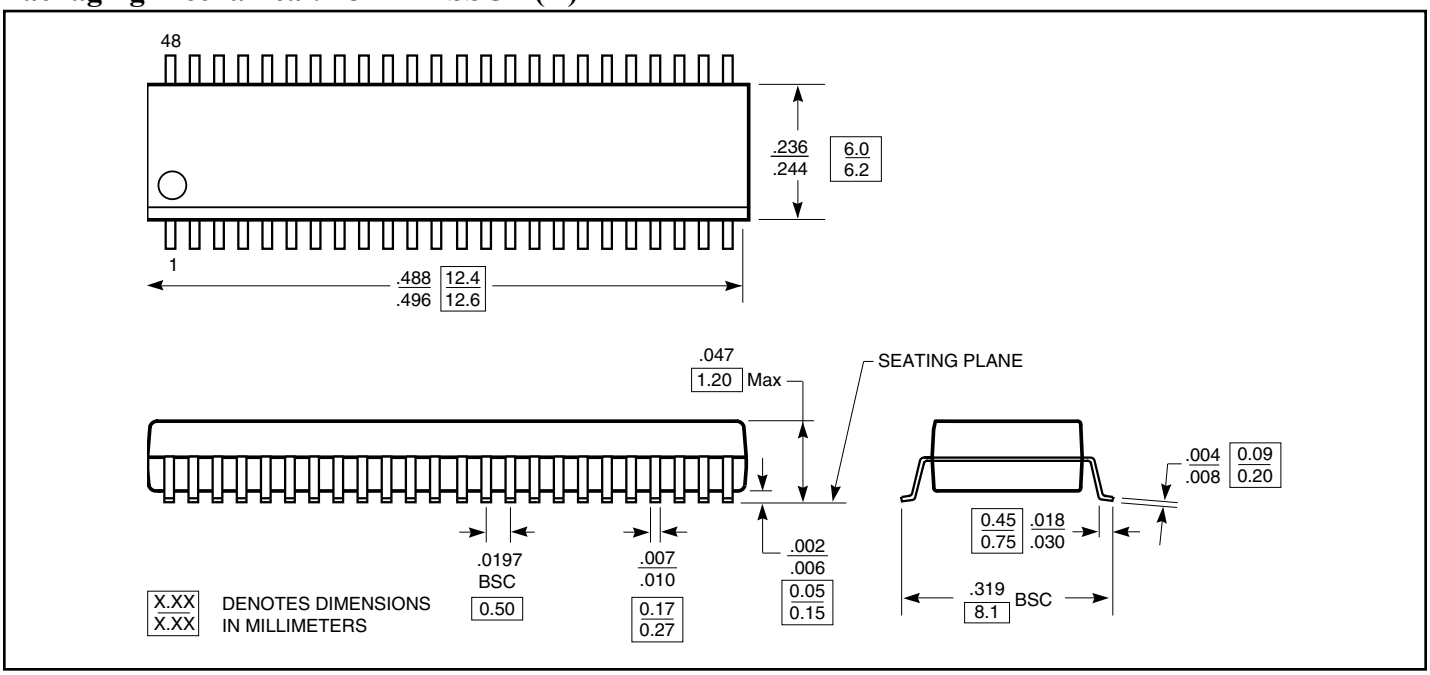

Ordering Information

Ordering Code	Package Code	Package Description
PI3USB40A	A	48-pin 240 mil wide plastic TSSOP
PI3USB40AE	A	Pb-free & Green, 48-pin 240 mil wide plastic TSSOP

Notes:

1. Thermal characteristics can be found on the company web site at www.pericom.com/packaging/